1. INTRODUCTION

In the plug-in ComatReleco S2 construction a remote control relay with 2 changeover contacts and an integrated power supply (24V, 100mA for external uses) is available.

The triggering can take place not only with potential-free contacts or 2-wire DC proximity switch but also by means of a 24V DC external supply.

The 24V/7mA control input design also permits triggering via long distances.

For diagnostic purposes the triggering of the output relay is indicated by LED.

Technical specifications subject to change without notice

---

2. ORDER TYPE

ComatReleco remote control relay	SFR1/AC220-240V SFR1/DC48V
Other voltages on request	

Accessories

Relay socket ComatReleco 11-pole	C11A, C12B0, CS11, EC11
Retaining spring ComatReleco	HF-24
Coding accessory	CA-11 (only usable with CS-11)

3. FUNCTION

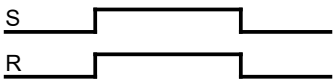

4. CIRCUIT, CONNECTIONS

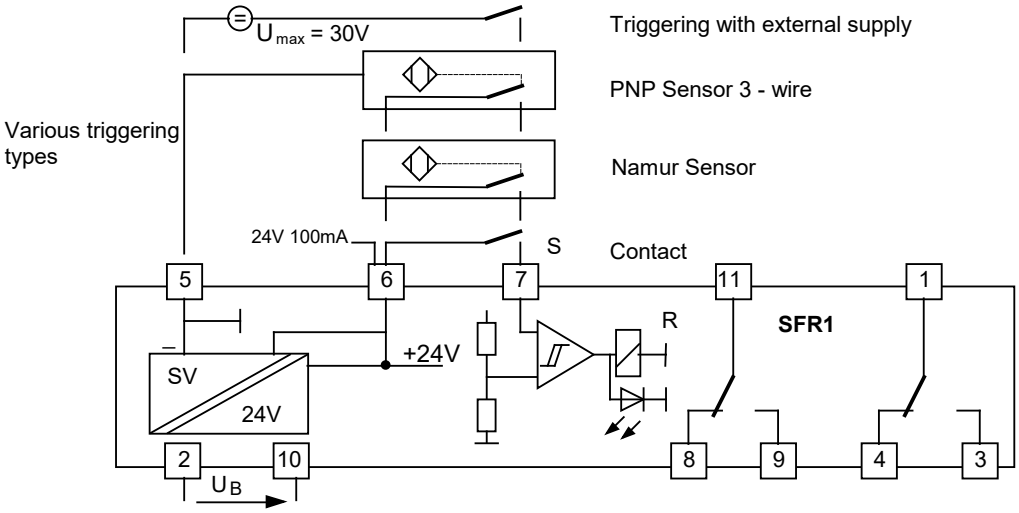

Connections
Seen on pins

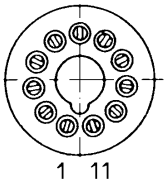

Fo-61.01-D-401 Datei: SFR1_DB_EN

Gez.	Entw.	Gepr.	Reg.	Datum	Ae M	Ausg.	Blatt: 1	Data sheet
wie		Pd	wie	26.5.97		1/6d	von: 3	SFR1/...
An				15.2.06	2763	2	M:	

Diese Unterlage ist unser geistiges Eigentum. Ohne unsere schriftliche Bewilligung darf diese weder kopiert noch Drittpersonen zugänglich gemacht werden. Für dieses Dokument behalten wir uns alle Rechte vor.

ComatReleco

15501 - 78 - 57 - 402

5. TECHNICAL DATA

5.1. Genaral data

5.1.1. Mechanical data

Case	S2 case with 11-plug according to IEC 67-1-18b
Case material	Noryl SE1 corresponds to UL 94V-1
Protection class	Case IP20, connections (plugged) IP20
Weight HF24	By means of plug base lockable with retaining spring
Vibration resistance	See item 7: Standards
Shock resistance	--

5.1.2. Ambient conditions

Ambient temperature - storage	-40°C ÷ +85°C
Ambient temperature - operating	-25°C ÷ +60°C
Relative humidity	10 ÷ 95% not condensed

5.2. Electrical data

5.2.1. Power supply

Type	AC230V	DC48V
Nominal voltage range	230V AC	48V DC
Operating voltage	205V ÷ 255V AC	29V ÷ 55V DC
Own consumption	5VA	0,6 ÷ 2W

5.2.2. DC output 24V pins 6-5

Output voltage	22 ÷ 25V DC	22 ÷ 25V
Output current (max. load)	<100mA DC	≤ 10mA / U_B42V

5.2.3. Triggering PIN 7

Triggering voltage inactive	-30V ÷ 7,5V DC
Triggering voltage active	18 ÷ 30V DC
Triggering current	7mA /24V DC
Parallel load energy	100V / 10ms /1Hz

5.2.4. Triggering behaviour with Namur Sensor 6-7

Sensor not loaded	output active
Sensor loaded	output inactive
Wire beak	output inactive

5.2.5. Time behaviour

Time delay	
$t_{V\ ON}$	30 - 50ms
$t_{V\ OFF}$	20 -30ms

Diese Unterlage ist unser geistiges Eigentum. Ohne unsere schriftliche Bewilligung darf diese weder kopiert noch Drittpersonen zugänglich gemacht werden. Für dieses Dokument behalten wir uns alle Rechte vor.

5.2.6. Outputs

Outputs	2 x U contacts
Contact material	AgNi
Switching voltage	(12) - 250V
Recommended min. load	12V 10mA
Switching current	5A
Breaking capacity	1250VA ...250W (0,25A/250V=)
Contact bounce	< 3ms
Service life mech.	2×10^7
electr.	8×10^2 /5A / 220V
Insulation contact against other connections	≥ 2kV rms

6. OPERATION

Status display relay triggering active	LED red

7. STANDARDS

7.1.	**Vibration safety**	IEC 571, item. 6.3
7.2.	**Immunity to interference**	IEC 255-4 Appendix E, Class III
		EN 50082-2 EN 61000-4-2 Air: 8kV; contact: 4kV
		EN 61000-4-4 ≥Level 3
		ENV 50140 ≥10V/m
		ENV 50204 ≥10V/m
		ENV 50141 ≥10V
7.3.	**Interference emission**	EN 50081-1 EN 55022 Class B
7.4.	**Low voltage**	EN 60065; contact according to EN 60947
	Conformity, identification	CE

8. CASE

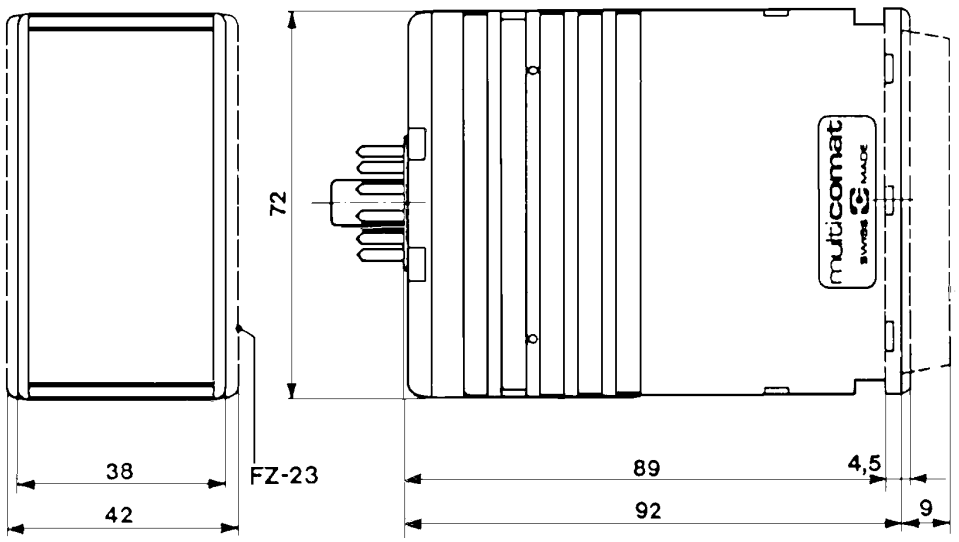

Diese Unterlage ist unser geistiges Eigentum. Ohne unsere schriftliche Bewilligung darf diese weder kopiert noch Drittpersonen zugänglich gemacht werden. Für dieses Dokument behalten wir uns alle Rechte vor.