C3-T32DX/DC120-125V

3 pole | changeover twin contact

Main circuit

Available contact materials	AgNi + 5 µ Au
Recommended minimum contact load	1 mA / 5 V
Maximum contact load AC	6 A / 250 V AC-1
Maximum contact load DC	6 A / 30 V DC-1
Inrush current	15 A, 20 ms
Rated load AC	1 200 VA
Rated load DC	fig. 3.
Rated current	6 A
Mechanical endurance (cycles)	≥ 20 000 000
Electrical endurance at rated load AC-1 (cycles)	≥ 180 000

Control circuit

Nominal voltage	see table product references
Operating voltage range	0.8 U_N … 1.1 U_N
Pick-up voltage	≤ 0.8 U_N
Release voltage	≥ 0.1 U_N
Power consumption AC / DC	2.2 VA / 1.3 W

Insulation

Test voltage open contact	1 kV / 1 min
Test voltage contact / contact	2.5 kV / 1 min
Test voltage contact / coil	2.5 kV / 1 min
Overvoltage category	III
Insulation resistance at 500 V	≥ 1 GΩ
Pollution degree	3

General data

Storage temperature (no ice)	-40 … 80 °C
Operation temperature	-40 … 60 °C
Pick-up time / bounce time	8 ms / ≤ 3 ms
Release time / bounce time	18 ms / ≤ 1 ms
Maximum switching frequency at rated load	1 200 / h
Weight	81 g
Housing material	PA / PC

Product references

Description	Type	120-125
LED & Free wheeling diode	C3-T3xDX/DC...V	✓

AC relays also available as 60 Hz. Other voltages on request. Please contact support@comatreleco.com.
«…» List coil voltage to complete product references.

Accessories

Socket	S3-B, S3-S, S3-M, S3-M0, S3-M1, EC-11
Blanking plug	SO-NP (BAG 10 PCS)
Test button without locking	S3-HP (BAG 10 PCS)

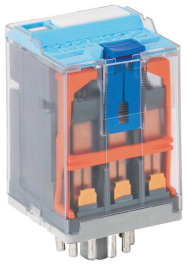

fig. 1. Wiring diagram

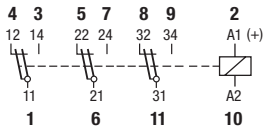

fig. 2. AC voltage endurance

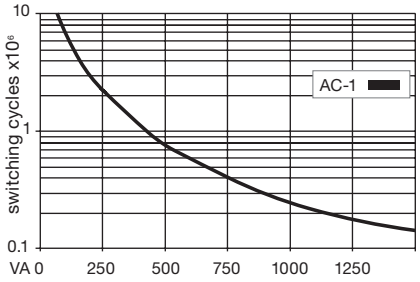

fig. 3. DC load limit curve

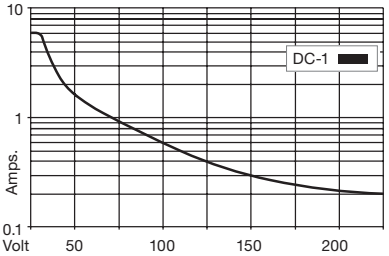

fig. 4. Dimensions (mm)

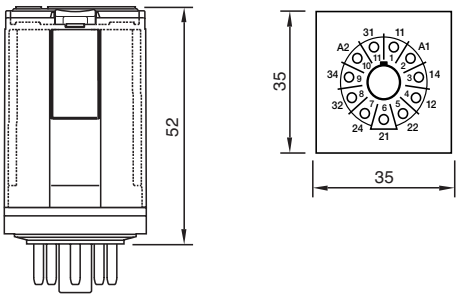

Technical approvals, conformities

Standards IEC/EN 60947; IEC/EN 61810

Approvals