# C3-X10X/AC120V 60HZ

## 1 pole | normally open serial contact

### Main circuit

| | |
|---|---|
| Available contact materials | AgNi |
| Recommended minimum contact load | 10 mA / 10 V |
| Maximum contact load AC | 10 A / 250 V AC-1 |
| Maximum contact load DC | 10 A / 30 V DC-1 |
| Inrush current | 30 A, 20 ms |
| Rated load AC | 2 500 VA |
| Rated load DC | fig. 3. |
| Rated current | 10 A |
| Mechanical endurance (cycles) | ≥ 20 000 000 |
| Electrical endurance at rated load AC-1 (cycles) | ≥ 500 000 |

### Control circuit

| | |
|---|---|
| Nominal voltage | see table product references |
| Operating voltage range | 0.8 $U_N$ … 1.1 $U_N$ |
| Pick-up voltage | ≤ 0.8 $U_N$ |
| Release voltage | ≥ 0.1 $U_N$ |
| Power consumption AC / DC | 2.4 VA / 1.3 W |

### Insulation

| | |
|---|---|
| Test voltage open contact | 2.5 kV / 1 min |
| Test voltage contact / coil | 2.5 kV / 1 min |
| Overvoltage category | III |
| Insulation resistance at 500 V | ≥ 1 GΩ |
| Pollution degree | 3 |

### General data

| | |
|---|---|
| Storage temperature (no ice) | -40 … 80 °C |
| Operation temperature | -40 … 60 °C |
| Pick-up time / bounce time | 18 ms / ≤ 3 ms |
| Release time / bounce time | 8 ms / ≤ 1 ms |
| Maximum switching frequency at rated load | 1 200 / h |
| Weight | 83 g |
| Housing material | PA / PC |

### Product references

| Description | Type | 120 |
|---|---|---|
| LED | C3-X10X/AC...V | ✓ |

AC relays also available as 60 Hz. Other voltages on request. Please contact support@comatreleco.com.
«…» List coil voltage to complete product references.

### Accessories

| | |
|---|---|
| Socket | S3-B, S3-S, S3-M, S3-M0, S3-M1 |
| Blanking plug | SO-NP (BAG 10 PCS) |
| Test button without locking | S3-HP (BAG 10 PCS) |

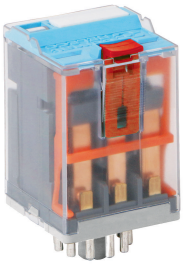

### fig. 1. Wiring diagram

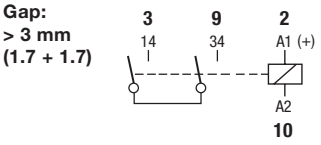


### fig. 2. AC voltage endurance

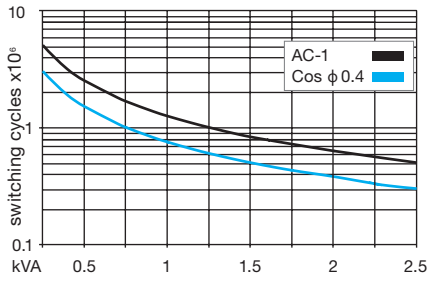


### fig. 3. DC load limit curve

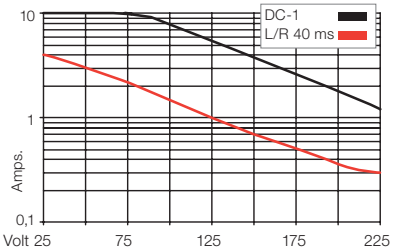


### fig. 4. Dimensions (mm)

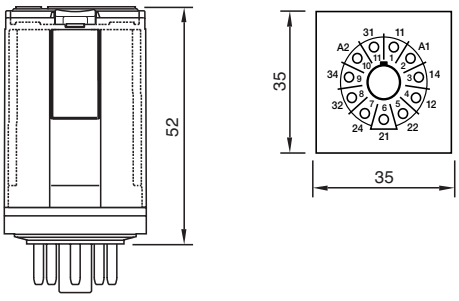


### Technical approvals, conformities

Standards IEC/EN 60947; IEC/EN 61810

Approvals